UAV Collision Avoidance Radar

SRD-D1

AINSTEIN

Safety from numbers

ADDRESS:
2029 Becker Drive,
Lawrence, KS 66047 USA

EMAIL:
hi@ainstein.ai

PHONE:
785-856-0460

Overview

Ainstein's SRD-D1 is based on the measurement target function with the distance, speed and azimuth angle of 24 GHz FMCW millimeter wave radar obstacle avoidance system products. It can be used in products such as drones and unmanned ships that require the installation of obstacle avoidance modules.

Specifications

Table 1: Specifications

Frequency Range	24 GHz ~ 24.25 GHz
Bandwidth	250 MHz
Detection Range	1.8m ~ 30 m[1]
Range Accuracy	0.6m
Velocity	-13 m/s ~ 13 m/s
Velocity Accuracy	0.4 m/s
Azimuth Angle	- 30 ° ~ + 30 °
Angle Accuracy	0.5 °
Update Rate	>10 Hz
Object Number	Up to 32 Objects
Data Interface	UART (default), CAN
Temp. Range	-10°C~70°C
Operating Voltage and Power consumption	input 5V~32V, 4W[2]
Dimensions	116mm*81mm*25mm (without mounting ears, cable)
Weight	<200g

Note:

1. *The min. range data that can be visualized is 1.8 m;*
2. *Current drawing depends on input voltage;*

UART Data Protocol Specifications

Protocol: UART
I/O Standard: 3.3V LVTTL
Baud Rate: 115200 b/s
Data length: 8 bits, plus one start bit and one stop bit, and no parity bit

Table 2 provides the details of SRD-D1 transmitter data format. It indicates all data transmitted from SRD-D1 to end-user device

Table 2: Data Format

From SRD-D1		To Receiver Device
No.byte	**Data**	**Description**
Byte 1 - 2 Frame Header	0x55	frame header high byte
	0xAA	frame header low byte
Byte 3	Device ID 1 byte (8-bit)	device ID byte (default 0xFF)
Byte 4	Firmware Version 1 byte (8-bit)	firmware version byte (default 0x00)
Byte 5 ~ 12 (1st object information)	2 bytes (16-bit)	object distance bytes (unsigned short int)[1]
	2 bytes (16-bit)	object velocity bytes (signed short int)[2]
	2 byte (16-bit)	object horizontal angle byte(signed short int)[3]
	1 byte (8-bit)	object signal strength byte (unsigned char)[4]
	1 byte (8-bit)	reserved byte (default 0x00)[5]
Byte 13 ~ 20 (2nd object information)	2 bytes (16-bit)	object distance bytes (unsigned short int)
	2 bytes (16-bit)	object velocity bytes (signed short int)
	2 byte (16-bit)	object horizontal angle byte(signed short int)
	1 byte (8-bit)	object signal strength byte (unsigned char)
	1 byte (8-bit)	reserved byte (default 0x00)
.....	8 byte per object	.....
Byte (N-3) Object Number	1 byte (8-bit)	object number byte (unsigned char)
Byte (N-2) Checksum	1 byte (8-bit)	checksum = (Byte 3 +Byte 4 + ... + Byte N-3) & 0xFF, Bitwise AND
Frame Tail	0x5A	frame tail high byte
	0xA5	frame tail low byte

1. *Distance Data = [object distance bytes] , unit: 0.01 m (cm);*
2. *Velocity Data = [object velocity bytes], unit: 0.1 m/s;*
3. *Horizontal Angle Data = [object horizontal angle byte], unit: °;*
4. *Signal Strength data definition here is:*

   $$Signal\,Strength = \sqrt[2]{Signal\,Power^2 - CFAR\,Threshold^2};$$

5. *Reserved byte is the space for any potential info in the future; Now it is 0x00;*

CAN Data Protocol Specifications

- Baud Rate: 500 kb/s
- Frame ID: Extended Frame 0x000EFF02
- Standard: CAN Protocol 2.0

A single data packet consist of multiple Extended CAN frames, including one header frame, one tail frame, and detected object(s) frame(s).

The data fields of the header frame and tail frames are defined in table 3 and table 4, they contain 4 Bytes (32 bits), respectively.

Table 3: CAN Header Frame Data Field Definition

From SRD-D1		To Receiver Device
No.byte	**Data**	**Description**
1	0x55	frame header high byte
2	0xAA	frame header low byte
3	Device ID 1 byte (8-bit)	device ID byte (default 0xFF)
4	Firmware Version 1 byte (8-bit)	firmware version byte (default 0x00)

Table 4: CAN Tail Frame Data Field Definition

From SRD-D1		To Receiver Device
No.byte	**Data**	**Description**
N-3	1 byte (8-bit)	object number byte (unsigned char)
N-2	1 byte (8-bit)	checksum = (Byte 3 +Byte 4 + ... + Byte N-3) & 0xFF, Bitwise AND
N-1	0x5A	frame tail high byte
N	0xA5	frame tail low byte

The data field of the detected object(s) frame(s) is defined in Table 5. It has 8 Bytes (64 bits) for every single frame. The number of these frames depends on the detected object(s) number, and can range from 0 to 32.

Table 5: CAN Object Frame Data Field Definition

From SRD-D1		To Receiver Device
No.byte	**Data**	**Description**
Byte 5 ~ 12/ Byte 13 ~ 20/	2 bytes (16-bit)	object distance bytes (unsigned short int)[1]
	2 bytes (16-bit)	object velocity bytes (signed short int)[2]
	2 byte (16-bit)	object horizontal angle byte(signed short int)[3]
	1 byte (8-bit)	object signal strength byte (unsigned char)[4]
	1 byte (8-bit)	reserved byte (default 0x00)[5]

Note:

1. *Distance Data = [object distance bytes] , unit: 0.01 m (cm);*
2. *Velocity Data = [object velocity bytes], unit: 0.1 m/s;*
3. *Horizontal Angle Data = [object horizontal angle byte], unit: °;*
4. *Signal Strength data definition here is:*

$$Signal\,Strength = \sqrt[2]{Signal\,Power^2 - CFAR\,Threshold^2};$$

5. *Reserved byte is the space for any potential info in the future; Now it is 0x00;*

Mechanical Drawing

Figure 1

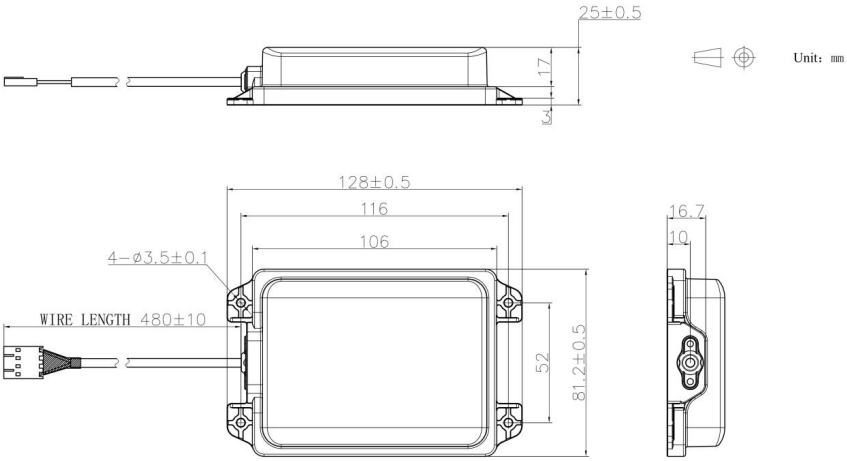

Hardware Interface

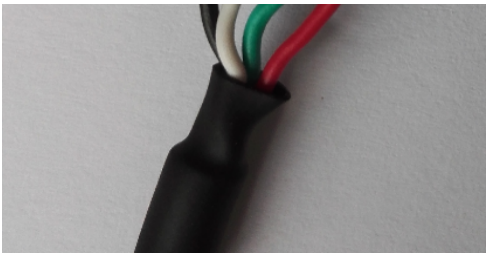

The external interface of SRD-D1 is a 4-Pin header, and the I/O standard is TTL. The pinout definition is described as below:

Table 6: Connector Pin Definition

Wire Color	UART	CAN
Black	Ground	Ground
White	RX(Radar)	CAN_LOW
Green	TX(Radar)	CAN_HI
Red	Voltage(5~32V)	Voltage(5~32V)

Installation Instructions

Mounting position is recommended at outside of drone's boundary, in case of propeller's effect on radar beam.

- Installation Orientation

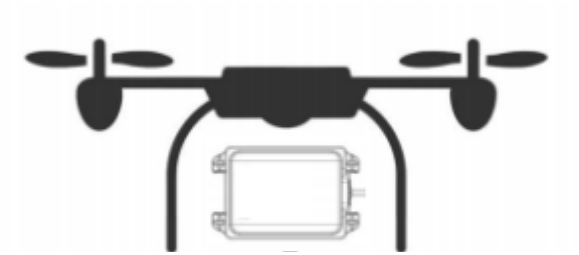

Known Issues

SRD-D1 is currently considered a ‘B-Sample’. Table 7 lists the known issues that will be addressed in future revisions.

Table 7: SRD-D1 Known Issues

Issue ID	Description	Notes
1	False detection from ground clutter	During installation, tilt up device with ~15°; 
2	Angle detection fluctuated at the center angle	Some processing method at receiver (e.g. tracking, filtering, clustering) might be useful. This depends on specific application;
3	Detection consistency for multiple target	SRD-D1’s range resolution is 0.6m, and angle resolution is ~15°. It cannot distinguish multiple objects when they are within SRD-D1’s range or angle resolution. Object reflection may affect detection consistency.

About Ainstein

Our mission is to enable safer driving, flying, working and living through radar-based technology. We are in the business of improving safety and protecting valuable assets through innovations in radar technology.

Ainstein makes radar systems smarter, more affordable and easier to deploy. We offer complete solutions for autonomous drones, advanced driver-assistance systems (ADAS), autonomous vehicles and industrial sensing – incorporating a combination of millimeter wave (mmWave) radar, sensor fusion and artificial intelligence (AI).

For years, cost, weight and performance constraints have hindered the wider adoption of radar. Ainstein makes radar systems accessible to everyone by overcoming these constraints. One recent innovation: we've developed the world's first UAV collision avoidance radar with 4D detection.

Radar systems and sensor data processing intelligence are keys to our autonomous future. We offer deep scientific, mathematical and engineering expertise along with a full spectrum portfolio (24GHz, 60GHZ, 76-81GHz) of hardware and software to support our customers in developing highly customized solutions with unmatched precision in unpredictable environments.

Our core team has more than a combined 100 years of experience in radar research and development with deep knowledge gained through projects funded by NASA, the U.S. National Science Foundation (NSF), the European Space Agency and others.

Other radar companies are at least two to three years behind Ainstein. Startups have been slow to market and are unable to produce at scale, while established companies are slow to adopt the newest technological innovations.

Ainstein products can be fully customized to specific application requirements, have unmatched precision in ALL weather conditions and surface types, and are a fraction of the price of competitive products.

Visit our website (www.ainstein.ai) for more information, or get in touch with Andrew Boushie, Vice President for Strategy and Partnerships, at andrew.boushie@ainstein.ai to arrange a phone call.